D FIRST STAGE

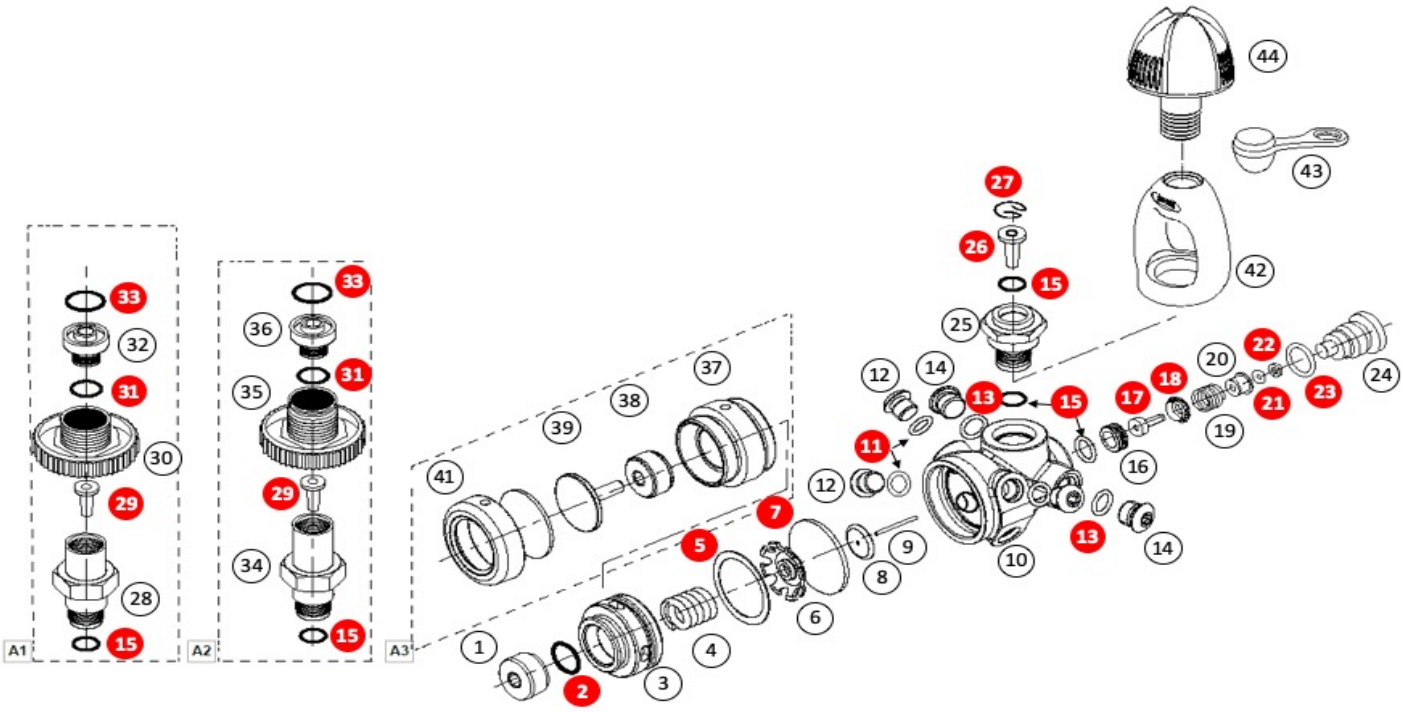

CHART NO: 1F	D FIRST STAGE	UPDATED: 07/01/2020

REF	CODE		DESCRIPTION
1	S500046	0390082000000A	Regulating nut
2	S5600021	0390377000000A	Antifriction ring
3	S5600020	0390376000000A	First stage Lock nut
4	S500044	0390081000000A	Spring diaphragm
5	S500040	0390080000000A	Antifriction ring
6	S810014	0390126000000A	Base spring plate
7	S500039	0390079000000A	First stage diaphragm
8	S810015	0390127000000A	First stage valve button
9	S5600023	0390379000000A	Pin
10	---	---	D First stage body
11	S101017	0390055000000A	O-Ring 2031
12	S850020	0390181000000A	L.P. port plug
13	S510022	0390086000000A	O-Ring 108
14	S850022	0390182000000A	H.P. port plug
15	40600	1190076000000A	O-Ring 2037
16	S5600025	0390381000000A	Valve seat
17	S500037	0390075000000A	First stage valve
18	S500037/B	0390076000000A	H.P. crown guide
19	S500036	0390074000000A	Valve spring
20	S500035	0390073000000A	O-Ring lock bush
21	16600	1190073000000A	O-Ring 2012
22	S500034	0390072000000A	Backup ring BK 2012
23	S101024	0390058000000A	O-Ring 2056
24	S850023	0390183000000A	Balancing chamber
25	S850011	0390177000000A	Yoke nut
26	S500030	0390071000000A	Conical filter INT
27	S500029	0390070000000A	Snap ring
28	S850007	0390175000000A	DIN connector body 230 BAR
29	S500051	0390083000000A	Conical filter DIN

REF	CODE		DESCRIPTION
30	S850005	0390173000000A	230 BAR Threaded locking ring
31	S101030	0390060000000A	O-Ring 2043
32	S850003	0390171000000A	O-Ring seat DIN 230 BAR
33	S810024	0390129000000A	O-Ring 3043
34	S850008	0390176000000A	DIN connector body 300 BAR
35	S850006	0390174000000A	DIN handwheel 300 BAR
36	S850004	0390172000000A	O-Ring seat DIN 300 BAR
37	S850018	0390180000000A	Antifreeze body
38	S500046	0390082000000A	Regulating nut
39	S810019	0390225000000A	Antifreeze piston
40	S810003	0390125000000A	Antifreeze diaphragm
41	S850013	0390178000000A	Cap
42	S840010	0390131000000A	Yoke
43	S500024	0390068000000A	Dust cap
44	S500025	0390069000000A	Handgrip
ASSEMBLIES			
---	5600005	0390365000000A	Service Kit D INT 230 bar
---	5600006	0390366000000A	Service Kit D INT ICE 230 bar
---	5600007	0390367000000A	Service Kit D DIN 230 bar
---	5600008	0390368000000A	Service Kit D DIN ICE 230-300 bar
A1	S850025	0390184000000A	DIN 230 BAR Kit
A2	S850026	0390185000000A	DIN 300 BAR Kit
A3	S850027	0390186000000A	ICE Kit
NOTE			
Parts highlighted in red are included in the service kits			

M FIRST STAGE

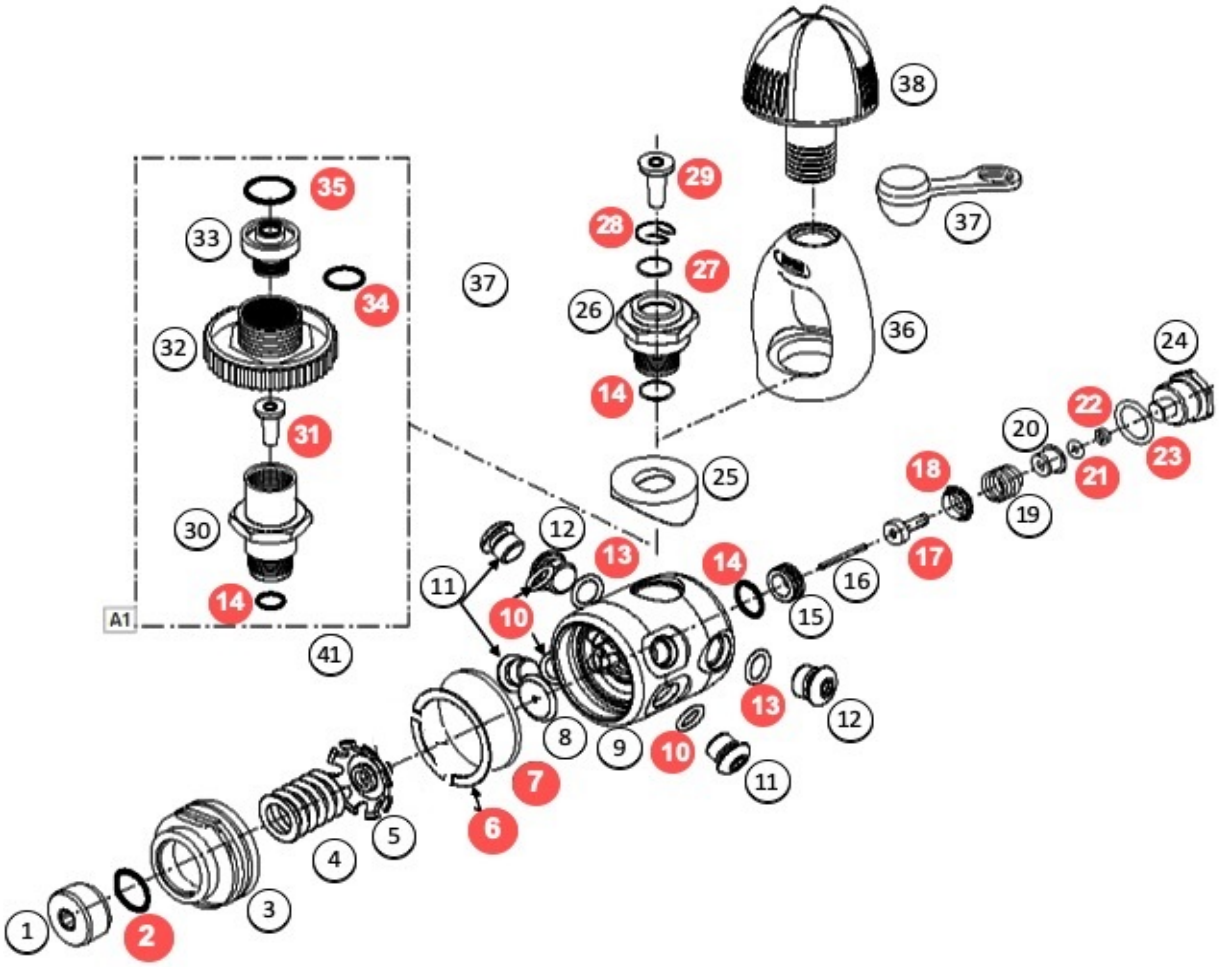

CHART NO: 2F	M FIRST STAGE	UPDATED: 07/01/2020

REF	CODE		DESCRIPTION
1	S500046	0390082000000A	Regulating nut
2	S5600021	0390377000000A	Antifriction ring
3	S5600020	0390376000000A	First stage Lock nut
4	S500044	0390081000000A	Spring diaphragm
5	S810014	0390126000000A	Base spring plate
6	S500040	0390080000000A	Antifriction ring
7	S500039	0390079000000A	First stage diaphragm
8	S810015	0390127000000A	First stage valve button
9	---	---	M first stage body
10	S101017	0390055000000A	O-Ring 2031
11	S850020	0390181000000A	L.P. port plug
12	S850022	0390182000000A	Synchro H.P. port plug
13	S510022	0390086000000A	O-Ring 108
14	40600	1190076000000A	O-Ring 2037
15	S5600025	0390381000000A	Valve seat
16	S5600017	0390373000000A	Pin
17	S500037	0390075000000A	First stage valve
18	S500037/B	0390076000000A	H.P. crown guide
19	S500036	0390074000000A	Valve spring
20	S500035	0390073000000A	O-Ring lock bush
21	16600	1190073000000A	O-Ring 2012
22	S500034	0390072000000A	Backup ring BK 2012
23	S101024	0390058000000A	O-Ring 2056
24	S5600019	0390375000000A	Balancing chamber

REF	CODE		DESCRIPTION
25	S5600012	0390357000000A	Saddle
26	S850011	0390177000000A	Yoke nut
27	40600	1190076000000A	O-Ring 2037
28	S500029	0390070000000A	Snap ring
29	S500030	0390071000000A	Conical filter INT
30	S850007	0390175000000A	DIN connector body 230 BAR
31	S500051	0390083000000A	Conical filter DIN
32	S850005	0390173000000A	DIN handwheel 230 BAR
33	S850003	0390171000000A	O-Ring seat DIN 230 BAR
34	S101030	0390060000000A	O-Ring 2043
35	S810024	0390129000000A	O-Ring 3043
36	S840010	0390131000000A	Yoke
37	S500024	0390068000000A	Dust cap
38	S500025	0390069000000A	Handgrip
ASSEMBLIES			
---	5600003	0390363000000A	Service Kit M DIN 230 bar
---	5600004	0390364000000A	Service Kit M INT 230 bar
A1	S850025	0390184000000A	D-Synchro DIN 230 BAR Kit
NOTE			
Parts highlighted in red are included in the service kits			

P FIRST STAGE

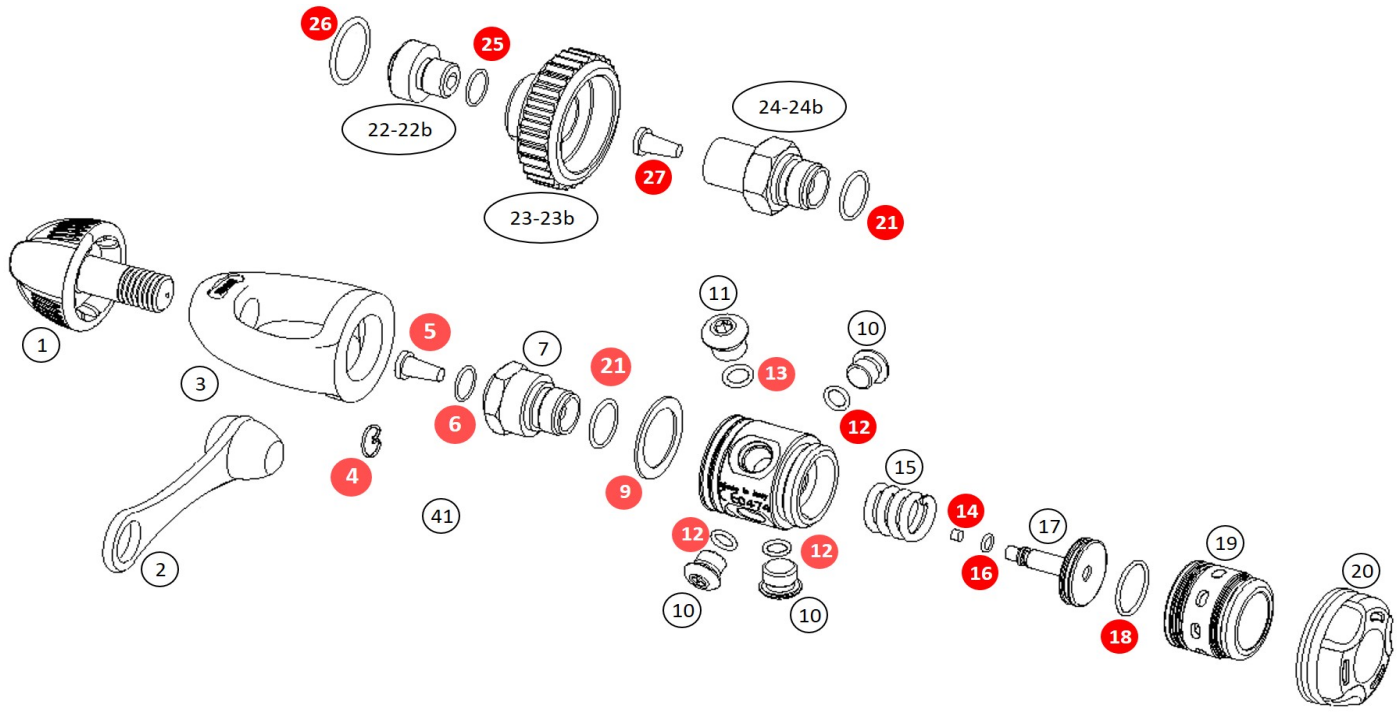

CHART NO: 3F	P FIRST STAGE	UPDATED: 07/01/2020

REF	CODE		DESCRIPTION
1	S500025	0390069000000A	Handgrip
2	S500024	0390068000000A	Dust cap
3	S840010	0390131000000A	Yoke
4	S500029	0390070000000A	Snap ring
5	S500030	0390071000000A	Conical filter INT
6	40600	1190076000000A	O-Ring 2037
7	S840011	0390132000000A	Yoke nut
9	S840013	0390133000000A	Antifriction ring
10	S850020	0390181000000A	L.P.port plug
11	S850022	0390182000000A	H.P.port plug
12	S101017	0390055000000A	O-Ring 2031
13	S510022	0390086000000A	O-Ring 108
14	S540005	0390088000000A	Piston seat
15	S540006	0390089000000A	Synchro first stage spring
16	S540007	0390090000000A	O-Ring 2018
17	S540008	0390092000000A	Synchro piston
18	S540009	0390093000000A	O-Ring 2100
19	S840014	0390134000000A	P-Synchro cap
20	S840015	0390135000000A	P-Synchro protection cap
21	S101024	0390058000000A	O-Ring 2056

REF	CODE		DESCRIPTION
22	S850003	0390171000000A	O-Ring seat DIN 230 BAR
22B	S850004	0390172000000A	O-Ring seat DIN DIN 300 BAR
23	S850005	0390173000000A	DIN 230 BAR handwheel
23B	S850006	0390174000000A	DIN 300 BAR handwheel
24	S840016	0390136000000A	DIN connector body 230 BAR
24B	S840017	0390137000000A	DIN connector body 300 BAR
25	S101030	0390060000000A	O-Ring 2043
26	S810024	0390129000000A	90 Sh O-Ring 3043
27	S500051	0390083000000A	Conical filter DIN
ASSEMBLIES			
---	8412	0390002000000A	Service Kit P-Synchro / X-5 P - INT 230 BAR
---	8417	0390003000000A	Service Kit P-Synchro / X-5 P - DIN 230 BAR
A1	S840025	0390138000000A	P-Synchro DIN 230 BAR Kit
A2	S840026	0390139000000A	P-Synchro DIN 300 BAR Kit
NOTE			
Parts highlighted in red are included in the service kits			

X200 SECOND STAGE

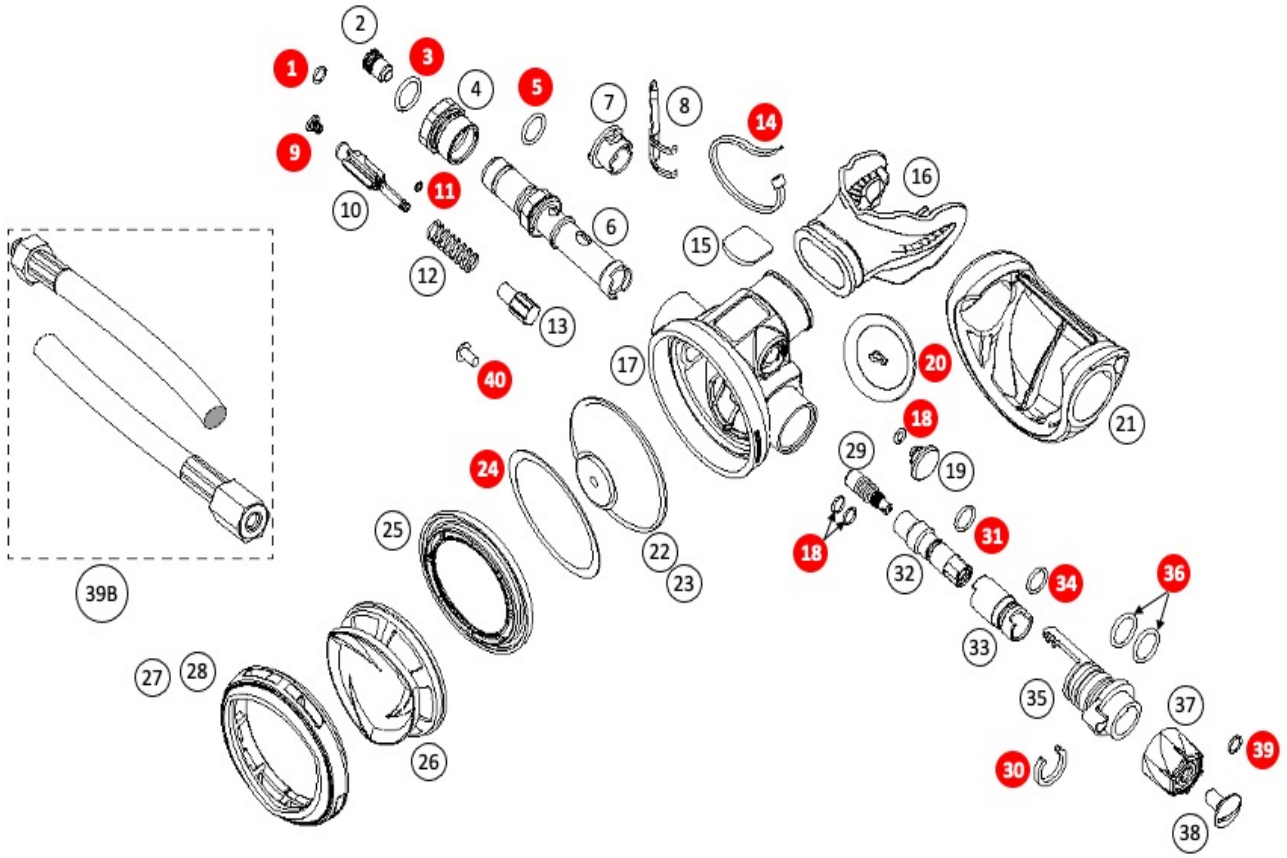

CHART NO: 1S	X200 SECOND STAGE	UPDATED: 07/01/2020

REF	CODE		DESCRIPTION	REF	CODE		DESCRIPTION
1	S500021	0390065000000A	O-ring 2025	25	S5600002	0390347000000A	X100 / X200 Internal retaining ring
2	S842031	0390164000000A	Orifice	26	390003	0390387000000A	X200 cover
3	S800003	0390122000000A	O-ring 2050	27	390001	0390385000000A	X200 cover retaining ring
4	390019	0390403000000A	Exagonal nut	28	390002	0390386000000A	X200 inox ring
5	390027	0390411000000A	O-ring nbr mm.11.10 x 1.78 ni 70 sh	29	390011	0390395000000A	X200 cursor
6	390015	0390399000000A	X200 housing	30	390008	0390392000000A	X200 clip
7	390012	0390396000000A	X200 lever bushing	31	390029	0390413000000A	O-ring nbr mm.6,07 x 1,63 ni 70 sh
8	390023	0390407000000A	X200 lever	32	390021	0390405000000A	X200 stem
9	390022	0390406000000A	X200 seat	33	390017	0390401000000A	X200 side housing
10	390010	0390394000000A	X200 poppet	34	390030	0390414000000A	O-ring nbr mm.7,65 x 1,63 ni 70 sh
11	390028	0390412000000A	O-ring nbr mm.2,00 x 1,00 ni 70 sh	35	390013	0390397000000A	X200 flow vane
12	S842024	0390158000000A	II stage spring	36	S77494	0390120000000A	O-ring 2062
13	390007	0390391000000A	X200 balance chamber	37	390009	0390393000000A	X200 knoh
14	S500023	0390067000000A	Mouthpiece strap	38	390024	0390408000000A	X200 Screw aisi 316
15	390025	0390409000000A	X200 label	39	390031	0390415000000A	O-ring nbr mm.5,00 x 1,00 ni 70 sh
16	236	1110057520000A	Mouthpiece	39B	S812042	0390035000000A	Hiflex LP hose cm 78
17	390005	0390389000000A	X200 case	40	S700119	0390106000000A	Pin case X100 / X200 / X100 Octo
18	S540007	0390090000000A	O-ring 2018	---	S812042	0390035000000A	Hiflex Hose 780mm
19	390006	0390390000000A	X200 plug	ASSEMBLIES			
20	S842035	0390167000000A	Exhaust valve				
21	390004	0390388000000A	X200 Exhaust tee	---	5600002	0390362000000A	Service Kit X200
22	S842005	0390142000000A	Diaphgram				
23	S842006	0390143000000A	Diaphgram disk	NOTE			
24	S842019	0390153000000A	Nylon 54,5x Antifriction washer	Parts highlighted in red are included in the service kits			

X100 SECOND STAGE

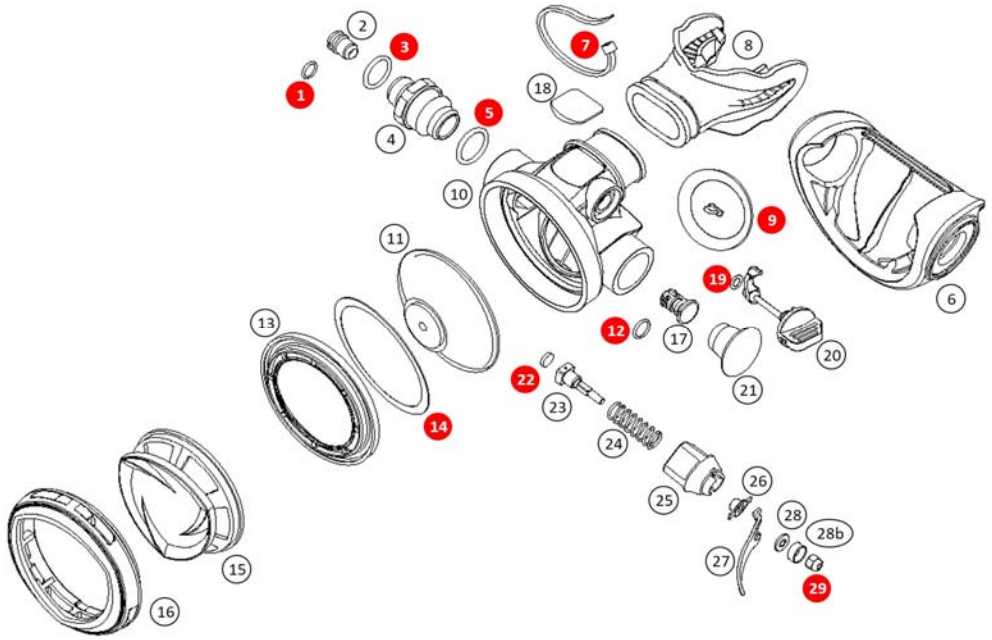

CHART NO: 2S	X100 SECOND STAGE	UPDATED: 07/01/2020

REF	CODE		DESCRIPTION
1	S500021	0390065000000A	O-Ring 2025 6,07 x 1,78
2	S842031	0390164000000A	Orifice
3	S800003	0390122000000A	O-Ring 2050 12,42 x 1,78
4	S842032	0390165000000A	Hose connection
5	S77494	0390120000000A	O-Ring 2062 15,60 x 1,78
6	S700133	0390108000000A	Exhaust tee X-5 / X-10 Pro / X100 / X100 Octo
7	S500023	0390067000000A	Mouthpiece strap
8	236	1110057520000A	Mouthpiece
9	S842035	0390167000000A	Exhaust valve
10	S5600015	0390360000000A	Second stage body X-5 / X-10 Pro X100 / X100 Octo
11	S842003	0390140000000A	Complete diaphragm
12	23602	1190074000000A	O-Ring 2015
13	S5600002	0390347000000A	X100 / X200 / X100 Octo Internal retaining ring
14	S842008	0390145000000A	Antifriction washer
15	S5600010	0390355000000A	X100 Rubber cover
15	S5600011	0390356000000A	X100 Octo Rubber Cover
16	S5600009	0390354000000A	X100 / X100 Octo cover retainig ring
17	S700119	0390106000000A	X-5 / X-10 Pro / X100 / X100 Octo Pin II stage
18	S5600006	0390351000000A	X100 / X100 Octo Label
19	S540007	0390090000000A	O-Ring 2018 4,48 x 1,78

REF	CODE		DESCRIPTION
20	S842020	0390154000000A	Flow deviator
21	S842021	0390155000000A	Exhaust tee plug
22	S842022	0390156000000A	Rubber seat
23	S842023	0390157000000A	II° Stage stem
24	S842024	0390158000000A	II° Stage spring
25	S5600003	0390348000000A	X100 / X100 Octo Lever support
26	S842026	0390160000000A	Insert housing
27	S5600005	0390350000000A	X100 / X100 Octo Lever
28	S842028	0390162000000A	3,2 x 7 x 0,5 UNI 6592 stainless steel washer
28B	S5600004	0390349000000A	Stem's truing washer
29	S500019	0390064000000A	Self-locking Nut
---	S812042	0390035000000A	Hiflex Hose 780mm
---	S812043	0390036000000A	Hiflex Hose Yellow 1000mm
ASSEMBLIES			
---	5600001	0390361000000A	Service Kit X100/X100 OCTOPUS
NOTE			
Parts highlighted in red are included in the service kits			

SYNCHRO SECOND STAGE

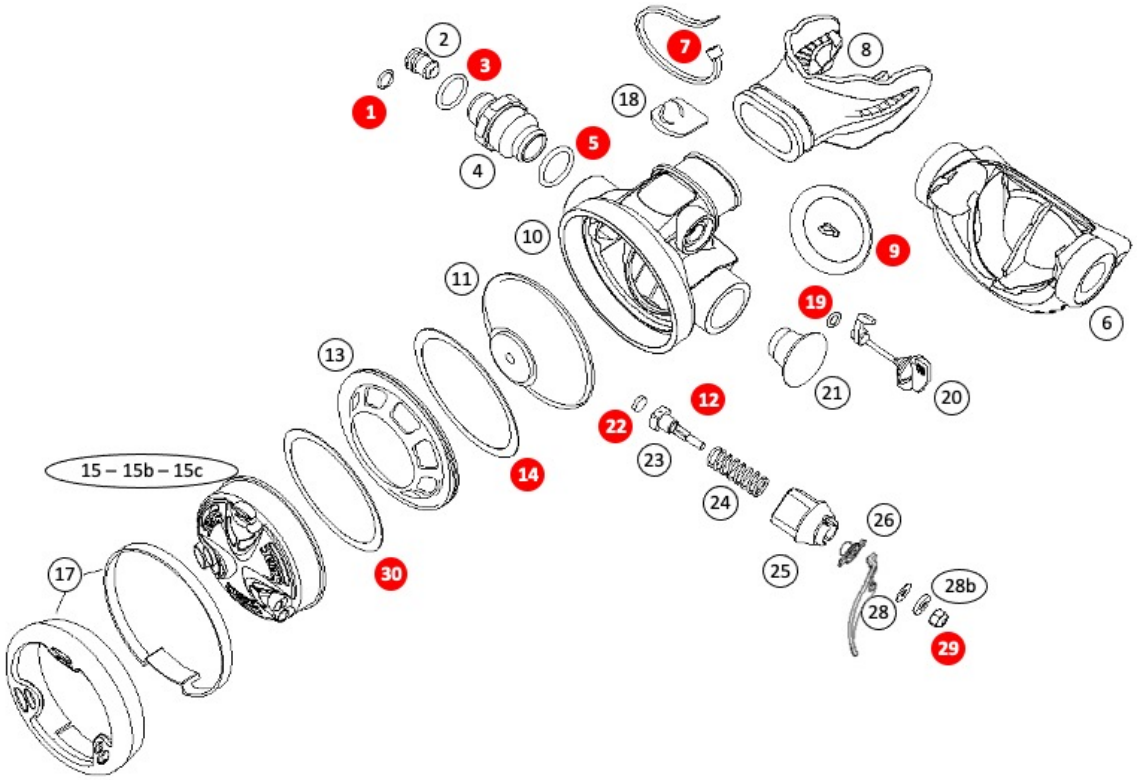

CHART NO: 3S	SYNCHRO SECOND STAGE	UPDATED: 07/01/2020

REF	CODE		DESCRIPTION	REF	CODE		DESCRIPTION
1	S500021	0390065000000A	6,07 x 1,78 O-Ring 2025	19	S540007	0390090000000A	4,48 x 1,78 O-Ring 2018
2	S842031	0390164000000A	Orifice	20	S842020	0390154000000A	Flow deviator
3	S800003	0390122000000A	12,42 x 1,78 O-Ring 2050	21	S842021	0390155000000A	Exhaust tee plug
4	S842032	0390165000000A	Hose connection	22	S842022	0390156000000A	Rubber seat
5	S77494	0390120000000A	15,60 x 1,78 O-Ring 2062	23	S842023	0390157000000A	II° Stage stem
6	S842033	0390166000000A	Exhaust tee	24	S842024	0390158000000A	II° Stage spring
7	S500023	0390067000000A	Mouthpiece strap	25	S842025	0390159000000A	Lever support
8	236	1110057520000A	Mouthpiece	26	S842026	0390160000000A	Insert housing
9	S842035	0390167000000A	Exhaust valve	27	S842027	0390161000000A	Lever
10	S842004	0390141000000A	Second stage body	28	S842028	0390162000000A	3,2 x 7 x 0,5 UNI 6592 stainless steel washer
11	S842003	0390140000000A	Complete diaphragm	28B	S842029	0390163000000A	Stem's truing washer
13	S842007	0390144000000A	Internal retaining ring	29	S500019	0390064000000A	Self-locking Nut
14	S842008	0390145000000A	Antifriction washer	30	S842019	0390153000000A	Cover antifriction washer
15	S842009G	0390146000000A	Synchro rubber cover	---	S812040	0390033000000A	Hose 770mm
15B	S842009Y	0390148000000A	Octo-Synchro rubber cover	---	S812041	0390034000000A	Hose Yellow 1000mm
15C	S842009N	0390147000000A	Black M-Synchro rubber cover	**ASSEMBLIES**			
17	S842011	0390150000000A	Complete cover retaining ring				
18	S842012	0390151000000A	P-Synchro label	---	8422	0390004000000A	Service Kit Synchro / X-10 / X-5 / X-10 Pro
18B	S842013	0390330000000A	D-Synchro label	**NOTE**			
18C	S842014	0390152000000A	Octo-Synchro label	Parts highlighted in red are included in the service kits			

UPDATED: 07/02/2020	REGULATORS OLD CODES

CODE	DESCRIPTION
8412	X-5 P - yoke 230 BAR first stage service kit
8417	X-5 P - t.c. 230 BAR first stage service kit
8422	Synchro / X-10 / X-5 / X-10 Pro second stage service kit
8512	D-Synchro / X-5 / X-10 / X-10 Pro / Diamond - int 230 BAR first stage service kit
8517	D-Synchro / X-5 / X-10 / X-10 Pro / Diamond - DIN 230 BAR first stage service kit
8521	D-Synchro / X-5 / X-10 / X-10 Pro / Diamond - ice int 230 BAR first stage service kit
8522	D-Synchro / X-5 / X-10 / X-10 Pro / Diamond - ice DIN 230-300 BAR first stage service kit
8612	M-Synchro / X-5 M - int 230 BAR first stage service kit
8617	M-Synchro / X-5 M - DIN 230 BAR first stage service kit
8717	10 NX-100 / X-10 Nitrox / X-10 Pro Nitrox / N-Synchro first stage service kit 11
8722	X-10 Pro Nitrox / X-10 Nitrox / N-Synchro second stage service kit
S840025	DIN Kit 230 BAR P-Synchro / X-5 P
S840026	DIN Kit 300 BAR P-Synchro / X-5 P
S850025	DIN Kit 230 BAR Diamond / D-Synchro / X-5 / X-10 / X-10 Pro / D - M-Synchro / X-5 M / M
S850026	DIN Kit 300 BAR Diamond / D-Synchro / X-5 / X-10 / X-10 Pro / D
S850027	Diamond / D-Synchro / X-5 / X-10 / X-10 Pro / D - antifreeze Kit
S812042	X-5 / X-10 / X-10 Pro regulator hose 780 mm
S812043	X-5 / X-10 / X-10 Pro regulator hose 1000 mm

REGULATORS/BCV SPECIAL TOOLS

1ST STAGE DISASSEMBLING TOOL Code 8548	2ND STAGE X200 ORIFICE ASSEMBLING / SETTING Code 0390419000000A	1ST VALVE SEAT TOOL Code 0390423000000A
II STAGE X200 CURSOR ASSEMBLING / SETTING Code 0390418000000A	SYNCHRO/X-100/X-5 ORIFICE ASSEMBLING / SETTING Code 0390022000000A	X100-X200 INTERNAL RING TOOL Code 0390370000000A
2ND STAGE DEMAND LEVER ADJUSTING TOOL Code 0390369000000A	X200 FLOW DEFLECTOR DISASSEMBLING Code 0390420000000A	SYNCHRO/X5 INTERNAL RING TOOL Code 8540
SPANNER Code S502008	SYNCHRO / X-5 COVER TOOL 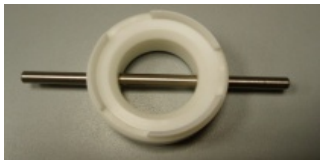 Code 8541	2ND STAGE DEMAND LEVER ADJUSTING TOOL SYNCHRO / X-5 Code 8546
FLOW DEFLECTOR DISASSEMBLING TOOL (SYNCHRO /X-5 /-X 100) Code 8543	PISTON SEAT DISASSEMBLING TOOL Code S760003	INFLATION BUTTON DISASSEMBLING TOOL SCS STANDARD Code S77499
2ND STAGE ORIFICE PLASTIC DISASSEMBLING TOOL Code 8547	YOKE NUT DISASSEMBLING / ASSEMBLING TOOL 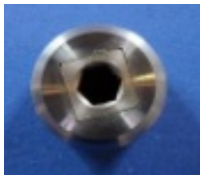 Code 8549	