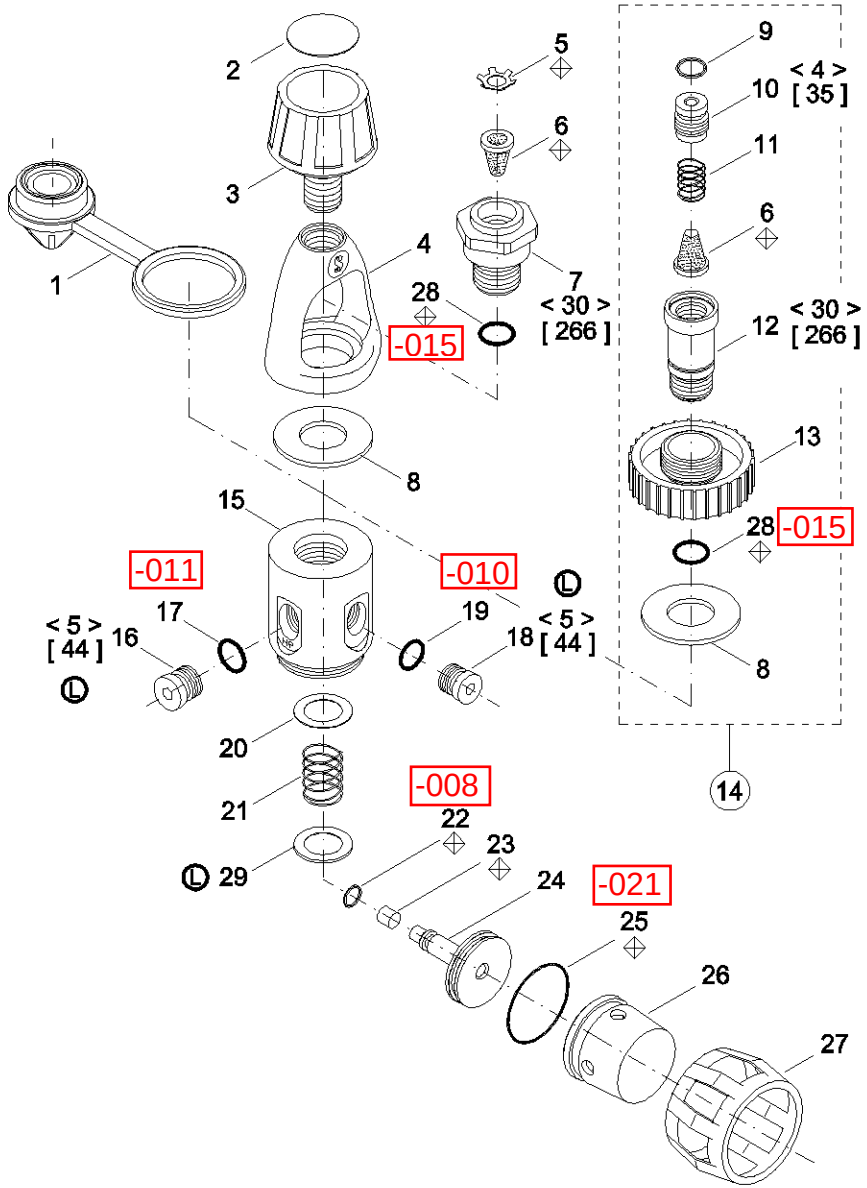


| Po. | P/N | DESCRIPTION | DESCRIZIONE | DESCRIPTION | BEZEICHNUNG |
|---|---|---|---|---|---|
| 1 | 10101211 | INLET PROTECT. DIN | TAPPO PROTEZ. DIN | PROT. ENTREE HP DIN | Schutzkugel DIN |
| 1 | 10101212 | INLET PROTECT. INT | TAPPO PROTEZ. INT | PROT. ENTREE HP INT | Schutzkugel INT |
| 2 | 01006041 | DECAL | DECAL | DECAL | Decal |
| 3 | 10200008 | YOKE SCREW | VOLANTINO | VIS ETRIER | Flugelschraube |
| 4 | 10705157 | YOKE | STAFFA | ETRIER | Anschlussbugel |
| 5 | 01073101 | RETAINER | FERMA FILTRO | RETEN. FILTRE | Sicherung |
| 6 | 01028109 | FILTER | FILTRO | FILTRE | Filter |
| 7 | 10103115 | YOKE RET. UNIV. | BLOCCA STAFFA | RET. ETRIER UNIV. | Bugelhalter |
| 8 | 10044021 | SPACER | SPAZIATORE | RONDELLE | Scheibe |
| 9 | 01050428 | O-RING | O-RING | JOINT TORIQUE | O-ring |
| 10 | 10400122 | FILTER RET. 200B | FERMA FILTRO 200B | RET. FILTRE 200B | Sicherung 200B |
| ** | 10400124 | FILTER RET. 300B | FERMA FILTRO 300B | RET. FILTRE 300B | Sicherung 300B |
| 11 | 01020179 | SPRING | MOLLA | RESSORT | Feder |
| 12 | 10400125 | KNOB RET. 200B | FERMO VOL. 200B | RET. VOLANT. 200B | Anschlusswelle 200B |
| ** | 10400126 | KNOB RET.300B | FERMO VOL. 300B | RET. VOLANT. 300B | Anschlusswelle 300B |
| 13 | 10105120 | KNOB 200B | VOLANTINO 200B | VOLANT. 200B | AnschluBschraube 200B |
| ** | 10105122 | KNOB 300B | VOLANTINO 300B | VOLANT. 300B | AnschluBschraube 300B |
| 14 | 100440X0 | KIT,CONV. INT/DIN | KIT TRASF. INT/DIN | KIT CONV. INT/DIN | Umbaukit INT/DIN |
| 15 | 10103210 | BODY | CORPo | CORPS | Gehause |
| 16 | 10101139 | PLUG HP | TAPPO HP | BOUCHON HP | VerschluBschraube HD |
| 17 | 01050138 | O-RING | O-RING | JOINT TORIQUE | O-ring |
| 18 | 10101104 | PLUG L.P. | TAPPO B.P. | BOUCHON M.P. | VerschluBschraube ND |
| 19 | 01050132 | O-RING | O-RING | JOINT TORIQUE | O-ring |
| 20 | 01060101 | WASHER | RONDELLA | RONDELLE | Scheibe |
| 21 | 01020226 | SPRING T.I.S. | MOLLA T.I.S. | RESSORT T.I.S. | Feder T.I.S. |
| 22 | 01050126 | O-RING | O-RING | JOINT TORIQUE | O-ring |
| 23 | 10102103 | SEAT | PASTIGLIA | CLAPET | Teflonsitz |
| 24 | 10102102 | PISTON | PISTONE | PISTON | Kolben |
| 25 | 01050177 | O-RING | O-RING | JOINT TORIQUE | O-ring |
| 26 | 10102109 | CAP | CAPPUCCIO | CHAPEAU | Kappe |
| 27 | 10060021 | CAP, SOFT | CAPPUCCIO MORB. | CAPUCHON | Capuze |
| 28 | 01050158 | O-RING | O-RING | JOINT TORIQUE | O-ring |
| 29 | 01060104 | WASHER | RONDELLA | RONDELLE | Scheibe |

< > Torque N·m $^{+2}_{-0}$
[ ] Torque lb·in $^{+18}_{-0}$
⌖ Annual replacement
** DIN 300 BAR

MK2 PLUS

CAT. NO. 10-060-X00

CONFIG. 10 | DATE 02/01 | 1 / 1

REV. L Pos. 16-18: added torque value - Modified pos. 29 (was P/N 01-060-104)

CHECKED

SCUBAPRO